USN

RV COLLEGE OF ENGINEERING®
(Autonomous Institution affiliated to VTU, Belagavi)
3rd Semester B. E. Nov/Dec-19 Examinations
ELECTRONICS & COMMUNICATION ENGINEERING
18EC34 / ANALYSIS & DESIGN OF DIGITAL CIRCUITS
MODEL PAPER

Time: 03 Hours *Maximum Marks: 100*

Instructions to candidates:

1. Answer all questions from Part A. Part A questions should be answered in first three pages of the answer book only.
2. Answer FIVE full questions from Part B. In Part B question number 2, 7 and 8 are compulsory. Answer any one full question from 3 and 4 & one full question from 5 and 6.

PART-A

1	1.1	A CMOS logic gate in a particular logic family has following specifications: V_{th} = 1V, V_{OH} = 4V, V_{IH} = 3V, V_{OL} = 1V, and V_{IL} = 1.5V. The logic high and low noise margin of a gate are _____ and _____.	2
	1.2	If the output high current of a gate is 100mA and its input high current is 10mA, the fan out of the gate is _____.	1
	1.3	The fastest digital IC logic family is _____ technology.	1
	1.4	The TTL circuit shown in the Fig.1.4 is fed with the waveform X. All gates have equal propagation delay of 10 ns. Plot the output (Y) timing diagram. 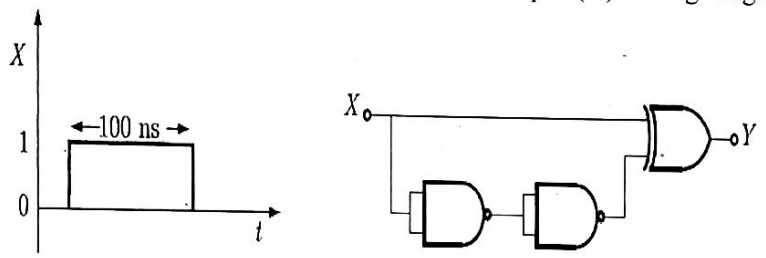 Fig. 1.4	1
	1.5	The functionality (Y) implemented using combinational circuit shown in Fig.1.5 _____. 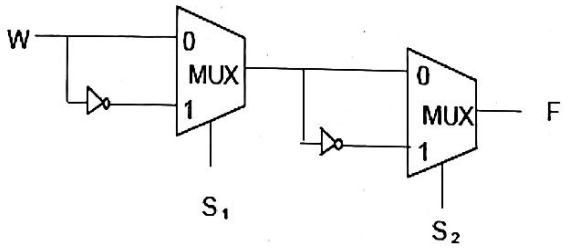 Fig. 1.5	2
	1.6	A half adder is implemented with XOR and AND gates. A full adder is implemented with two half adders and one OR gate. The propagation delay of an XOR gate is twice that of an AND/OR gate. The propagation delay of an AND/OR gate is 1.2 microseconds. A 4-bit ripple-carry binary adder is implemented by using full adders. The total propagation time of this 4-bit binary adder in micro seconds is_____.	2
	1.7	The simplified POS expression for the logic function shown in Fig.1.7 is_____.	2

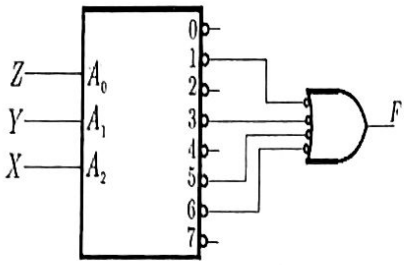

Fig. 1.7

1.8 The frequency of the clock signal applied to the rising edge triggered D-FF shown in Fig.1.8 is 10 kHz. The frequency of the signal available at Q is _____. 1

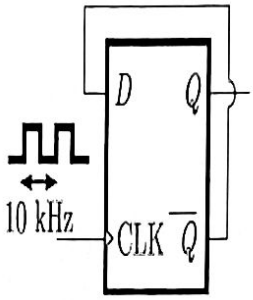

Fig.1.8

1.9 A sequential circuit with D-FF and logic gates are shown in Fig.1.9. The circuit represents _____ FF . 1

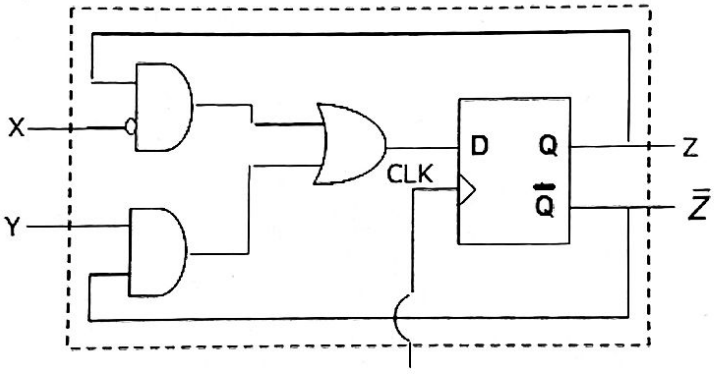

Fig.1.9

1.10 A Sequential circuit shown in Fig. 1.10 is a Mod-K counter. The value of K is _____. 2

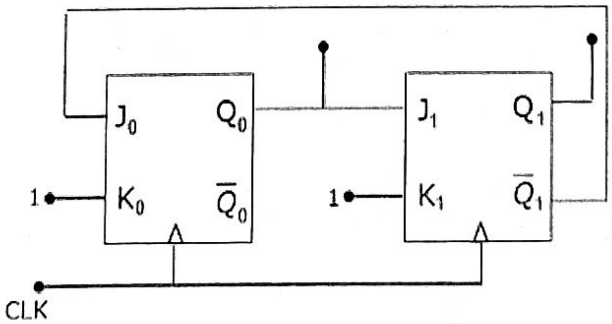

Fig.1.10

1.11 A 4-bit ripple and synchronous counters are designed using flip-flops having propagation delay of 10ns each. The worst case delay in ripple and synchronous counters are _____ and _____ respectively. 1

	1.12	The initial contents of the 4-bit serial-in-parallel-out, right shift, shift register as shown in Fig.1.12 is 0110. After 3 clock pulses, the content of shift register is_____. 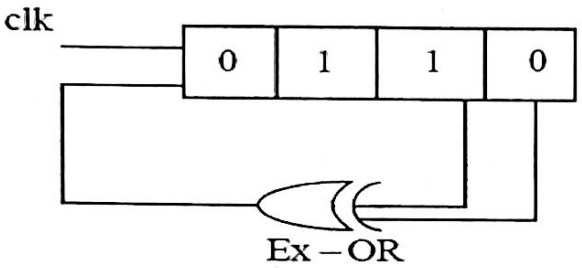 Fig.1.12	2
	1.13	For the following set of micro operations, write the control word register contents. i) R1 ← Crc R2 ii) R3 ← R5 xor R5.	2

PART-B

2	a	List out the basic properties of a digital logic gate. Design a two input CMOS NAND gate and explain its working.	6
	b	Simplify the Boolean expression Y= $\sum m(1,2,3,7,9,11,17,18,23,25,29,31)+d(5,6,10,16)$ using K-map method.	4
	c	An automobile alarm circuit is used to detect certain undesirable conditions. There are three switches used to indicate the status of the door adjacent to driver's seat, the ignition and the head lights respectively. Design the logic circuit with these three switches as the inputs, so that the alarm will be activated whenever either of the following conditions exist: (a) The head lights are on while the ignition is off. (b) The door is open while the ignition is on.	6

3	a	Implement the following Boolean functions (f_1 and f_2) using suitable multiplexer. $f_1=(y' + x)z$ and $f_2=(y' z' +x'y +yz')$	6
	b	Design 3X2 binary multiplier using adders and logic gates.	6
	c	Design an exces-3 to binary code converter using suitable parallel adder and controlled inverters.	4
		OR	
4	a	Design an application specific decoder to drive common cathode seven segment display.	8
	b	With the help of necessary Boolean equations, design and explain the working of 4-bit Carry look ahead adder.	8

5	a	Design a positive edge triggered D-FF using NAND gates and explain its operation using relevant waveforms and function table.	8
	b	Design a bidirectional shift register to perform following operations using suitable logic devices.	4
	c	Construct a 4-bit Johnson counter and Draw the timing diagram for the same.	4
		OR	

6	a	With a neat diagram and function table, explain the working of Master Slave JK-Flip Flop with preset and clear facilities designed using NAND gates only.	7
	b	Draw a serial adder using shift registers, 1-bit adder and a D-FF. Write the state diagram for the same and design a mechanism to stop the addition after 4th bit.	4
	c	Design a sequence generator to generate the binary sequence 10110.	5

7	a	Design a sequential circuit using D-FFs satisfying following state conditions with the help of state table and state diagram. Where X and Y are the input and output respectively. $A(t+1)=A(t)'.X+B(t).X'$ $B(t+1)=A(t).X'$ $Y=(A(t)+B(t))'.X$	8
	b	Design a mod-6 ripple up counter using JK-Flip-Flops.	
	c	For the sequential logic represented by the state diagram shown in Fig.7c, perform state reduction and draw the reduced state diagram. 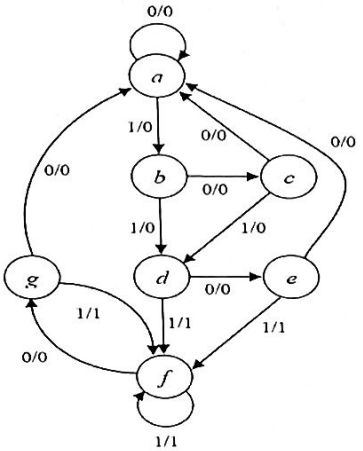 Fig.7c	4 4

8	a	What is a scratch pad memory? Explain the organization of a processor unit using scratch pad memory with the help of a neat diagram.	4
	b	Write a short note on Status register used in ALU of a processor.	4
	c	Design an arithmetic and logic circuit with three selection variables $S_2S_1S_0$ that generate the following operations. Draw the logic diagram of one typical stage.	8

USN | | | | | | | | | | |

RV COLLEGE OF ENGINEERING®

(An Autonomous Institution affiliated to VTU)

III Semester B. E. Examinations April - 2022

COMMON FOR ECE/EEE/EIE/ETE

ANALYSIS AND DESIGN OF DIGITAL CIRCUITS

Time: 03 Hours ***Maximum Marks: 100***

Instructions to candidates:

1. Answer all questions from Part A. Part A questions should be answered in first three pages of the answer book only.
2. Answer FIVE full questions from Part B. In Part B question number 2, 7 and 8 are compulsory. Answer any one full question from 3 and 4 & one full question from 5 and 6.

PART-A

1	1.1	If a logic circuit has a fan out of 4 then the circuit can drive 4 inputs.	01
	1.2	CMOS logic family dissipates minimum power?	01
	1.3	The logic level of ECL are taken as for '0'= -1.8V (neg) and for '1' = 0.8 (pos).	02
	1.4	The simplification in minimal sum of product (SOP) of $Y = F(A,B,C,D) = \varepsilon_m(0,2,3,6,7) + \varepsilon_d(8,10,11,15)$ using k-map is given by Y= $\overline{A}C + \overline{B}\,\overline{D}$	02
	1.5	The k-map given below in Fig. 1.5 represents the bit G_2 for a 4-bit binary $(B_4B_3B_2B_1)$ to Gray $(G_4G_3G_2G_1)$ converter. What will be the expression for G_2 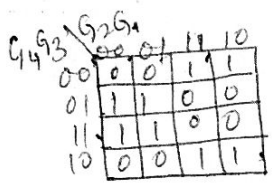 $B_3 \oplus B_2$ Fig. 1.5	02
	1.6	The following in Fig. 1.6 circuit compares two 2-bit binary numbers, X and Y represented by X_1X_0 and Y_1Y_0 respectively. *(X_0 and Y_0) represent LS bits.* Under what condition Z will be 1? 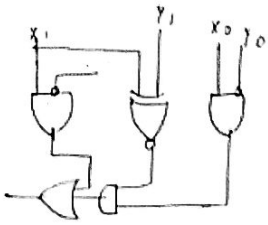 $X > Y$ Fig. 1.6	02
	1.7	The 8:3 Encoder are designed by three OR gates.	01
	1.8	MUX can be used as parallel to serial converter.	01
	1.9	Let 'x' be the number of AND gates present in a 4-bit carry look ahead adder and 'y' be the number of OR gates present in that adder then the value of 2x+2y is 28.	01
	1.10	3 bit Full adder contains 8 17 combinational inputs.	01
	1.11	How many Flip-flop circuits needed to be divided by 16 counters? 4	01
	1.12	If an input to a T-Filp Flop is 200 Hz signal, then what will be output signal frequency if four T-FFS are connected in cascade? 12.5 Hz $200/2^4$	01
	1.13	What happens to the parallel output word in an asynchronous binary down counter whenever a clock pulse occurs? output decreases by 1	01

1.14	The terminal count of a typical mod-10 binary counter is 1001.	01
1.15	A serial in/parallel out, 4 bit shift register initially contains all 1's. The data nibble 0111 is waiting to enter. After 4 clock pulses, the register contains 0111.	01
1.16	The ALU gives the output of the operations and the output is stored in the Register	01

PART-B

2	a	List out the basic properties of a digital logic gate, with a diagram illustrate the working of CMOS NAND gate. $\bar{a}d$	08
	b	Obtain the prime implicant of the function $f(a,b,c,d) = \varepsilon(0,2,3,4,8,10,12,13,14)$ using Quine-McCluskey algorithm. $a\bar{b}\bar{c}+\bar{a}\bar{b}c+\bar{c}\bar{d}$	06
	c	Illustrate the concepts of noise-margin in digital circuits. $NML = V_{IL} - V_{OL}$ $NMH = V_{OH} - V_{IH}$	02
3	a	Elaborate the significance of digital multiplexer. Illustrate the 4-line to 1-line multiplexer with logical symbol, logic diagram and function table.	08
	b	Design a BCD to excess-3 code converter using 4-bit full adder.	04
	c	Illustrate the working of a 4-bit binary parallel adder with a neat diagram.	04
		OR	
4	a	Implement the following Boolean expression using 8x1 MUX $F(a,b,c,d) = \varepsilon_m(0,1,5,6,7,9,10,15)$ $1, 0, d, 1, d, \bar{d}, 0, d$	08
	b	Design a 2-bit magnitude comparator and realize using suitable logic gates. $A>B \Rightarrow A_1\bar{B}_1 + \bar{B}_1\bar{B}_0A_0 + A_1A_0\bar{B}_0$ $A=B \Rightarrow A_1A_0B_1B_0 + \bar{A}_1A_0B_1B_0 + A_1A_0B_1B_0 + A_1\bar{A}_0B_1\bar{B}_0$ $A<B$	08
5	a	Design a D-FF using NAND gates and elaborate its operation using relevant characteristic table and characteristic equation.	08
	b	Discuss the flip-flop excitation table of RS-FF, JK-FF,D-FF and T-FF. S R J K D T 0 0 0 X 0 X 0 0 0 1 1 0 1 X 1 1 1 0 0 1 X 1 0 1 1 1 X 0 X 0 1 0	08
		OR	
6	a	Construct a 4-bit binary ripple counter and write its count sequence.	06
	b	Construct a 4-bit Johnson counter with count sequence.	04
	c	Design a serial adder using a sequential logic procedure.	06
7	a	Design a synchronous Mod-6 counter using clocked JK-FFS.	08
	b	Analyze the synchronous sequential circuit given in Fig. 7.b, write state table, and state diagram. $J_2 = Q_1Q_0$ $K_2 = Q_0$ $J_1 = \bar{Q}_2Q_0$ $K_1 = Q_0$ $J_0 = K_0 = 1$ 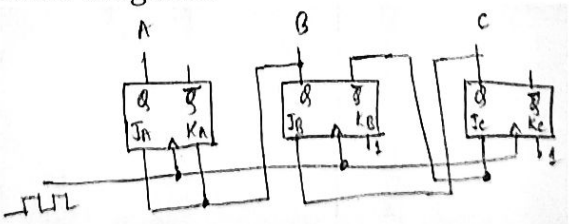 Fig. 7.b 0, 1, 2, 4, 5, 6, 0	08
8	a	Explain two port scratch pad memory with reference to the processor architecture.	06
	b	With the help of logic diagram of Arithmetic unit, describe the working of Arithmetic circuit. $X_i = A_i$, $Y_i = S_0B_i + S_1\bar{B}_i$, $Z_i = C_i$	06
	c	Write a short note on status register of a processor. S, Z, V, C	04

0	1	Shift right
1	0	Shift left
1	1	Parallel load

	c)	Realize Mod-7 twisted ring counter using positive edge triggered D-flip flops and explain its counting sequence.	[06 Marks]
9.	a)	Draw a Mealy and Moore synchronous machine models. Label the excitation variables, input variables, and output variables.	[08 Marks]
	b)	For the logic diagram shown in the fig Q.7b: i. Derive the excitation and output equation. ii. Write the next state equations. iii. Construct a transition table. iv. Draw the state diagram 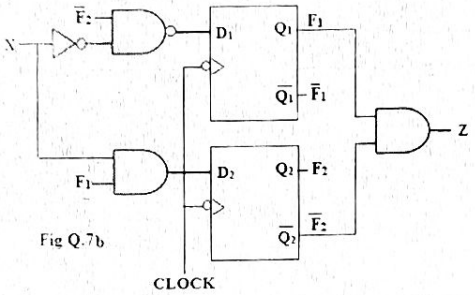 Fig Q.7b	[12 Marks]

OR

10.	a)	With neat block diagrams, distinguish between Mealy and Moore models.	[08 Marks]
	b)	A sequential network has one input and one output. The state diagram is shown in fig Q.7b. Design the sequential circuit with T-flip flops. 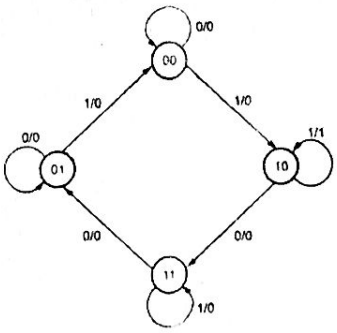 **Fig Q.7b**	[12 Marks]

******